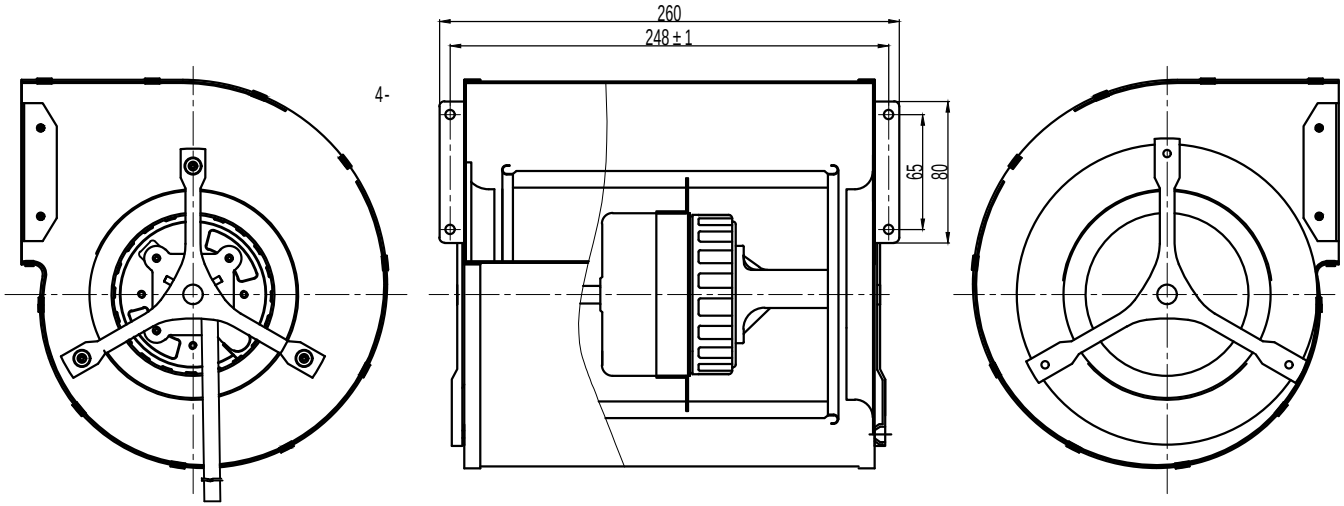

(Ambient temp)

(Protected Class)

MOTOR CONNECTION CHART			
NO.	Colour ( )	Function	Guage ( )
1		Vm 24Vdc	
2	(blue)	(COM)	
3	(yellow)	0 10Vdc/PWM	UL2464 22AWG
4	(white)	(3P/R) (Tach pulse output)	

A	1:1
1	1

FLSW146/190A-2206C-2-H29